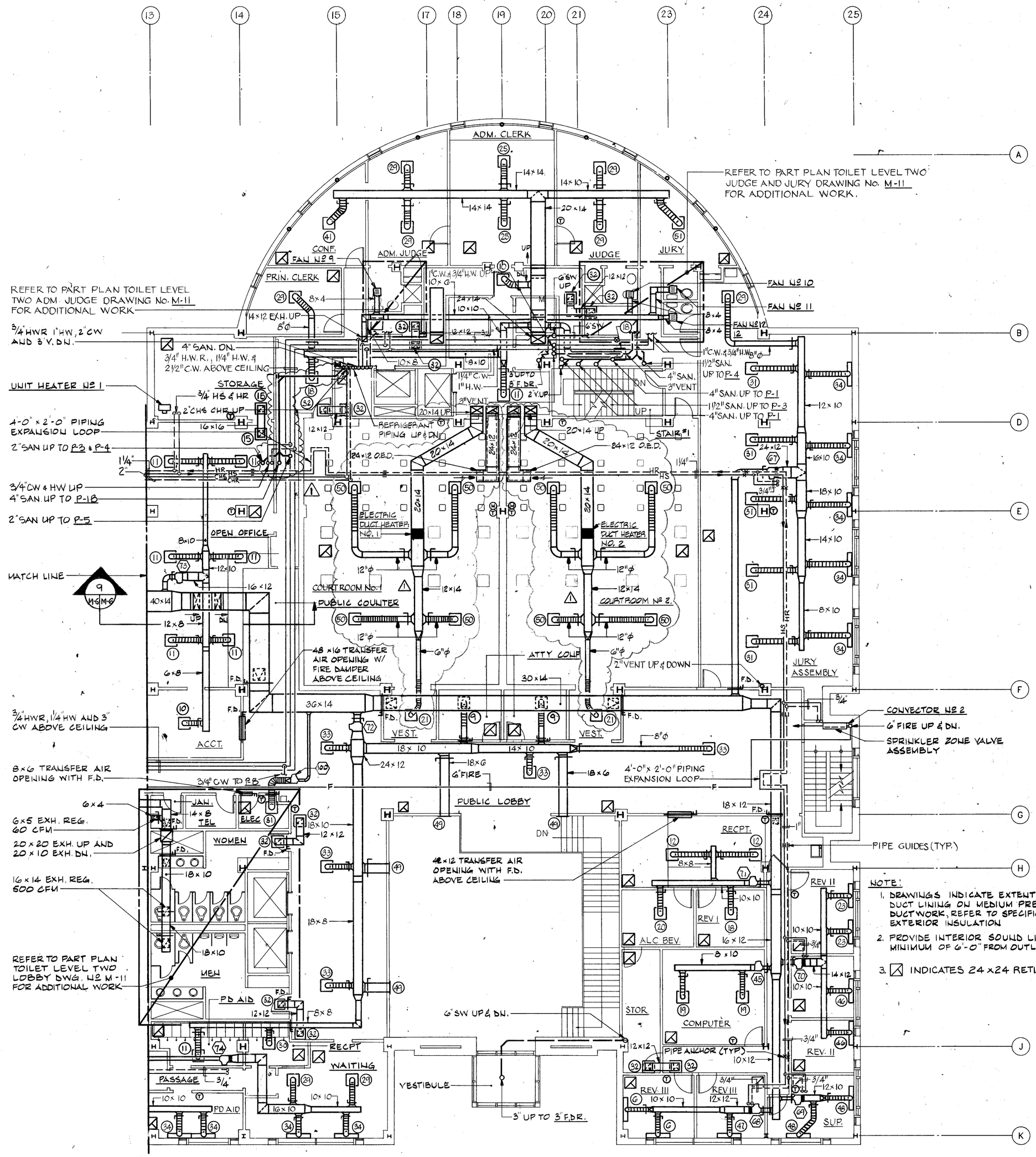

NOTE:

1. DRAWINGS INDICATE EXTENT OF INTERIOR DUCT LINING ON MEDIUM PRESSURE DUCTWORK, REFER TO SPECIFICATIONS FOR EXTERIOR INSULATION
2. PROVIDE INTERIOR SOUND LINING FOR A MINIMUM OF 6'-0" FROM OUTLET OF VAV. BOX.
3. ☒ INDICATES 24 x 24 RETURN AIR GRILLE

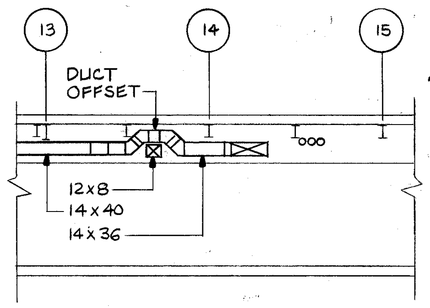

SECTION 9 / M-6
SCALE: 1/8" = 1'-0"

FLOOR PLAN - LEVEL TWO SOUTH

SCALE: 1/8" = 1'-0"

SCALE: 1/8" = 1'-0"

Hord Coplan Macht, Inc.
Architects
Landscape Architects
Interior Designers
2526 St. Paul Street
Baltimore, Maryland
21218 • 301-467-7011

RIPARIUS CONSTRUCTION, INC.
SUITE 230
PADONIA ROAD WEST
TIMONIUM, MARYLAND 21093
301-561-3368

SEAL

SALISBURY DISTRICT COURT/ MULTI-SERVICE CENTER

WICOMICO COUNTY
201 BAPTIST STREET
SALISBURY, MARYLAND 21801

DEPARTMENT OF GENERAL SERVICES APPROVAL
PROJECT ADMINISTRATOR — DATE
DIRECTOR, ENGR. & CONSTRUCTION — DATE

USING AGENCY APPROVAL
TITLE — DATE

CONSULTANTS :

McCRONE
Civil Engineers/Planners/Surveyors

GEORGE EVANS ASSOCIATES, INC.
Structural Engineers

GIPE ASSOCIATES, INC.
Mechanical/Electrical Engineers

KEY PLAN

△3-8-90 REVISION

REVISED

SHEET TITLE
FLOOR PLAN - LEVEL TWO SOUTH

HCM NO. 89022
DRAWN EIE
SCALE AS NOTED
DATE 12-22-89
DRAWING
M-6